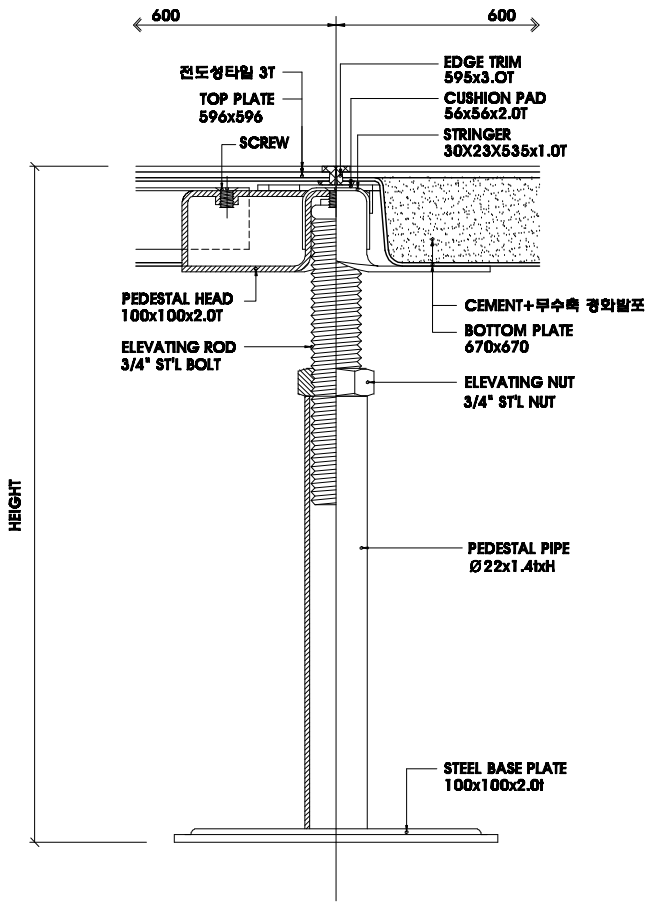

ASSEMBLY DETAIL

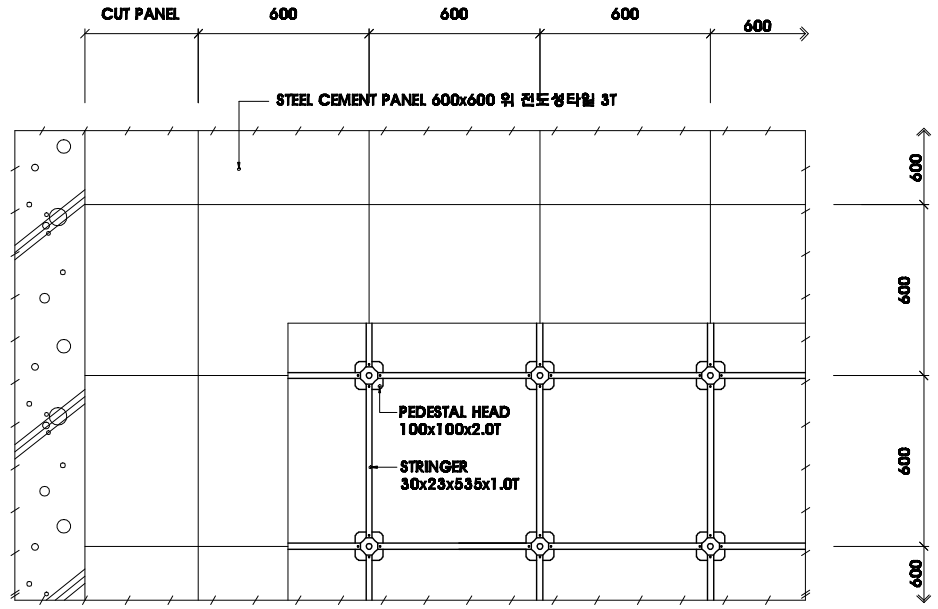

GROUND DETAIL

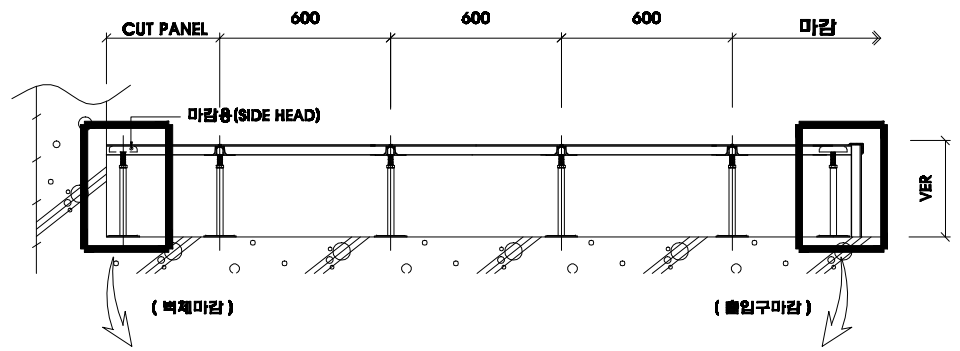

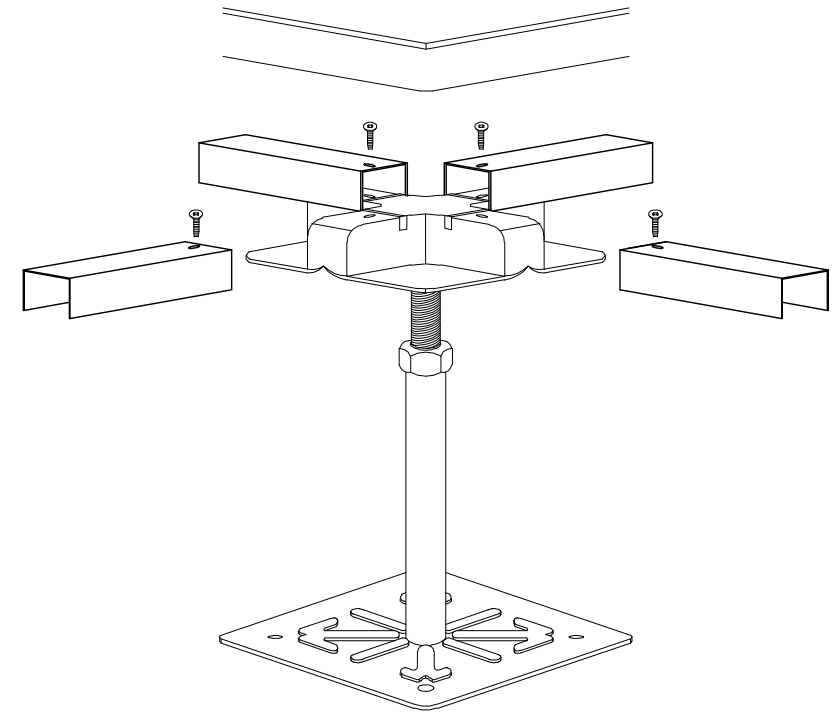

지지대 (일반용)

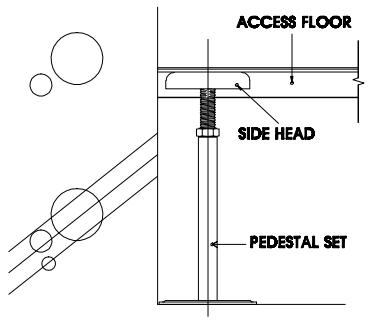

벽체,기둥부분 상세도

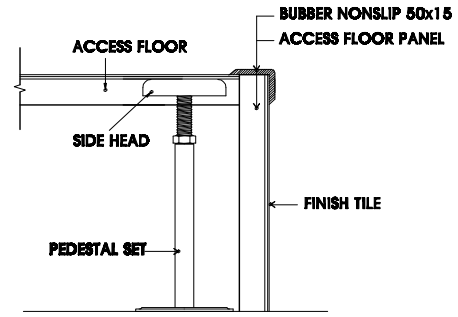

출입문마감 상세도

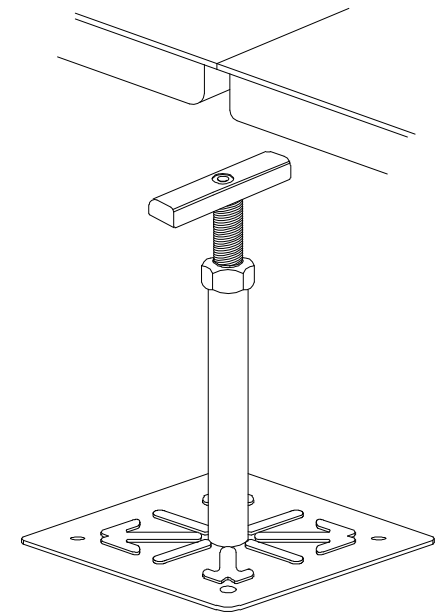

지지대 (마감용)

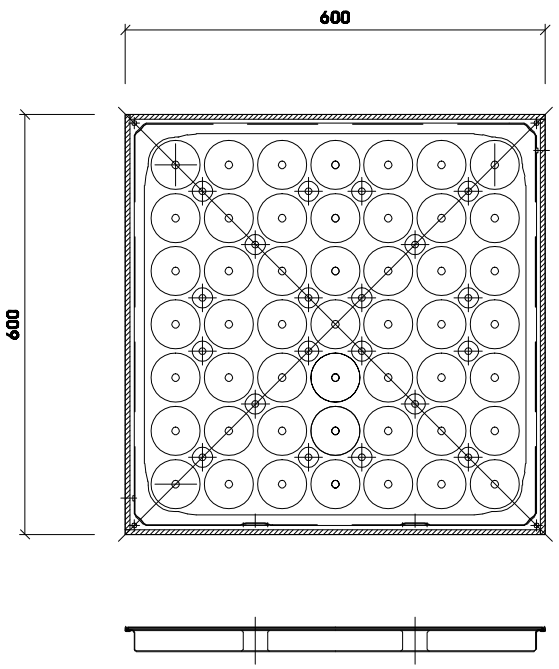

STEEL CEMENT PANEL

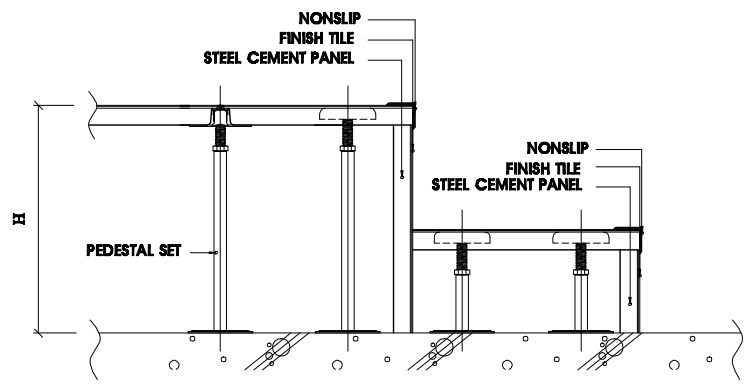

"STEP" DETAIL

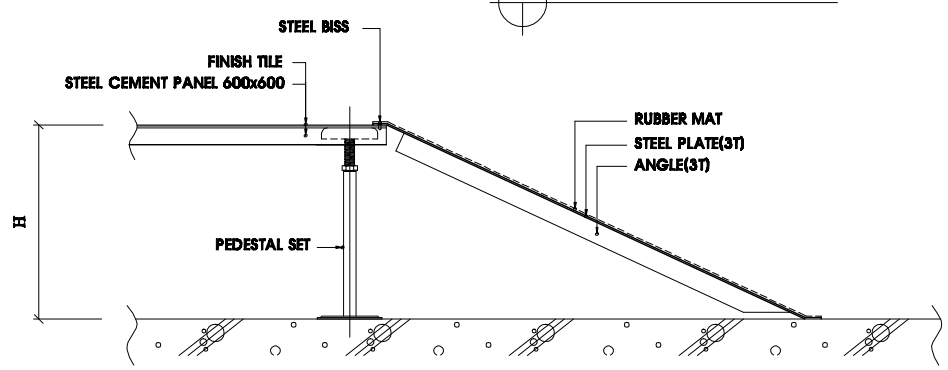

"RAMP" DETAIL

CLIENT

PROJECT TITLE

NOTE:

NO.	NOTE	DATE	APP

REVISIONS

DAECHANG STEEL
RAP 사업부
인천광역시 남동구 고잔동 677-6
TEL : 032)817-1260
FAX: 032)814-7745

APPROVED BY.

CHECKED BY.

DRAWN BY
MI-SUN LEE

DATE.

DRAWING TITLE.
STEEL CEMENT CORE PANEL
(A2-AF600C)

SCALE.
NONE

DRAWING NO.
A2-AF600C-01

SHEET NO.